SOUNDTOUCH® 300 SOUNDBAR

OWNER'S GUIDE • BRUGERVEJLEDNING
BEDIENUNGSANLEITUNG • GEBRUIKERSHANDLEIDING
GUÍA DEL USUARIO • KÄYTTÖOHJE • NOTICE D'UTILISATION
MANUALE DI ISTRUZIONI • KEZELÉSI ÚTMUTATÓ
BRUKERVEILEDNING • PODRĘCZNIK UŻYTKOWNIKA
MANUAL DO PROPRIETÁRIO • BRUKSANVISNING
คู่มือผู้ใช้ • 사용자 안내서 • 用户指南 • 使用者指南 • 取扱説明書 • دليل المالك

Please read and keep all safety and use instructions.

Important Safety Instructions

1. Read these instructions.
2. Keep these instructions.
3. Heed all warnings.
4. Follow all instructions.
5. Do not use this apparatus near water.
6. Clean only with a dry cloth.
7. Do not block any ventilation openings. Install in accordance with the manufacturer's instructions.
8. Do not install near any heat sources such as radiators, heat registers, stoves, or other apparatus (including amplifiers) that produce heat.
9. Protect the power cord from being walked on or pinched particularly at plugs, convenience receptacles, and the point where they exit from the apparatus.
10. Only use attachments/accessories specified by the manufacturer.
11. Unplug this apparatus during lightning storms or when unused for long periods of time.
12. Refer all servicing to qualified personnel. Servicing is required when the apparatus has been damaged in any way, such as power-supply cord or plug is damaged, liquid has been spilled or objects have fallen into the apparatus, the apparatus has been exposed to rain or moisture, does not operate normally, or has been dropped.

WARNINGS/CAUTIONS

This symbol on the product means there is uninsulated, dangerous voltage within the product enclosure that may present a risk of electrical shock.

This symbol on the product means there are important operating and maintenance instructions in this guide.

This product contains a tempered glass surface. Use caution to avoid impact. In the event of breakage, use care in handling broken glass.

Contains small parts which may be a choking hazard. Not suitable for children under age 3.

This product contains magnetic material. Consult your physician on whether this might affect your implantable medical device.

- To reduce the risk of fire or electrical shock, do NOT expose this product to rain, liquids or moisture.
- Do NOT expose this product to dripping or splashing, and do not place objects filled with liquids, such as vases, on or near the product.
- Keep the product away from fire and heat sources. Do NOT place naked flame sources, such as lighted candles, on or near the product.
- Do NOT make unauthorized alterations to this product.
- Do NOT use a power inverter with this product.
- Do NOT use in vehicles or boats.
- Where the mains plug or an appliance coupler is used as the disconnect device, the disconnect device shall remain readily operable.

仅适用于 2000m 以下地区安全使用
Use at altitude less than 2000 meters only.

- The WB-300 wall bracket is only for use with the SoundTouch® 300 soundbar.
- Only use the mounting hardware supplied with this product.
- Do not mount on surfaces that are not sturdy, or that have hazards concealed behind them, such as electrical wiring or plumbing. If you are not sure about installing the bracket, contact a qualified professional installer. Ensure the bracket is installed according to local building codes.
- Due to ventilation requirements, Bose does not recommend placing the product in a confined space such as in a wall cavity or in an enclosed cabinet.
- Do not place or install the bracket or product near any heat sources, such as fireplaces, radiators, heat registers or other apparatus (including amplifiers) that produce heat.
- The product label is located on the back of the soundbar.

REGULATORY INFORMATION

NOTE: This equipment has been tested and found to comply with the limits for a Class B digital device, pursuant to Part 15 of the FCC Rules. These limits are designed to provide reasonable protection against harmful interference in a residential installation. This equipment generates, uses, and can radiate radio frequency energy and, if not installed and used in accordance with the instructions, may cause harmful interference to radio communications. However, there is no guarantee that interference will not occur in a particular installation. If this equipment does cause harmful interference to radio or television reception, which can be determined by turning the equipment off and on, the user is encouraged to try to correct the interference by one or more of the following measures:

- Reorient or relocate the receiving antenna.
- Increase the separation between the equipment and receiver.
- Connect the equipment into an outlet on a circuit different from that to which the receiver is connected.
- Consult the dealer or an experienced radio/TV technician for help.

Changes or modifications not expressly approved by Bose Corporation could void the user's authority to operate this equipment.

This device complies with part 15 of the FCC Rules with Industry Canada license-exempt RSS standard(s). Operation is subject to the following two conditions: (1) This device may not cause harmful interference, and (2) this device must accept any interference received, including interference that may cause undesired operation.

This device complies with FCC and Industry Canada radiation exposure limits set forth for general population.
This equipment should be installed and operated with a minimum distance of 20 cm between radiator and your body.
This transmitter must not be co-located or operating in conjunction with any other antenna or transmitter.

This device for operation in the 5150 – 5250 MHz is for indoor use only to reduce the potential for harmful interference to co-channel mobile satellite systems.

W52/W53 Indoor Only

Management Regulation for Low-power Radio-frequency Devices

Article XII

According to "Management Regulation for Low-power Radio-frequency Devices" without permission granted by the NCC, any company, enterprise, or user is not allowed to change frequency, enhance transmitting power or alter original characteristic as well as performance to an approved low power radio-frequency devices.

Article XIV

The low power radio-frequency devices shall not influence aircraft security and interfere legal communications; If found, the user shall cease operating immediately until no interference is achieved. The said legal communications means radio communications operated in compliance with the Telecommunications Act.

The low power radio-frequency devices must be susceptible with the interference from legal communications or ISM radio wave radiated devices.

Bose Corporation hereby declares that this product is in compliance with the essential requirements and other relevant provisions of Directive 2014/53/EU and all other applicable EU directive requirements. The complete declaration of conformity can be found at: www.Bose.com/compliance

Frequency band of operation 2400 to 2480 MHz:

- *Bluetooth*/Wi-Fi: Maximum transmit power less than 20 dBm EIRP.
- *Bluetooth* Low Energy: Maximum power spectral density less than 10 dBm/MHz EIRP.

Frequency band of operation 5150 to 5175 MHz:

- Wi-Fi: Maximum transmit power per EN301893 standard.

This symbol means the product must not be discarded as household waste, and should be delivered to an appropriate collection facility for recycling. Proper disposal and recycling helps protect natural resources, human health and the environment. For more information on disposal and recycling of this product, contact your local municipality, disposal service, or the shop where you bought this product.

China Restriction of Hazardous Substances Table

Names and Contents of Toxic or Hazardous Substances or Elements						
	Toxic or Hazardous Substances and Elements					
Part Name	**Lead (Pb)**	**Mercury (Hg)**	**Cadmium (Cd)**	**Hexavalent (CR(VI))**	**Polybrominated Biphenyl (PBB)**	**Polybrominated diphenylether (PBDE)**
PCBs	X	O	O	O	O	O
Metal Parts	X	O	O	O	O	O
Plastic Parts	O	O	O	O	O	O
Speakers	X	O	O	O	O	O
Cables	X	O	O	O	O	O

This table is prepared in accordance with the provisions of SJ/T 11364.

O: Indicates that this toxic or hazardous substance contained in all of the homogeneous materials for this part is below the limit requirement of GB/T 26572.

X: Indicates that this toxic or hazardous substance contained in at least one of the homogeneous materials used for this part is above the limit requirement of GB/T 26572.

Taiwan Restriction of Hazardous Substances Table

Equipment name: Bose® SoundTouch® 300 soundbar, Type designation: 421650						
	Restricted substances and its chemical symbols					
Unit	Lead (Pb)	Mercury (Hg)	Cadmium (Cd)	Hexavalent chromium (Cr+6)	Polybrominated biphenyls (PBB)	Polybrominated diphenyl ethers (PBDE)
PCBs	–	○	○	○	○	○
Metal Parts	–	○	○	○	○	○
Plastic Parts	○	○	○	○	○	○
Speakers	–	○	○	○	○	○
Cables	–	○	○	○	○	○

Note 1: "○" indicates that the percentage content of the restricted substance does not exceed the percentage of reference value of presence.

Note 2: The "–" indicates that the restricted substance corresponds to the exemption.

REGULATORY INFORMATION

Date of Manufacture: The eighth digit in the serial number indicates the year of manufacture; "7" is 2007 or 2017.

Amazon, Kindle, Fire and all related logos are trademarks of Amazon, Inc. or its affiliates.

Apple and the Apple logo are trademarks of Apple Inc., registered in the U.S. and other countries. App Store is a service mark of Apple Inc.

Android, Google Play, and the Google Play logo are trademarks of Google Inc.

The *Bluetooth*® word mark and logos are registered trademarks owned by Bluetooth SIG, Inc. and any use of such marks by Bose Corporation is under license.

DOLBY AUDIO™ Dolby, Dolby Audio and the double-D symbol are trademarks of Dolby Laboratories.

dts™ Digital Surround For DTS patents, see http://patents.dts.com. Manufactured under license from DTS, Inc. DTS, the Symbol, DTS in combination with the Symbol, and DTS Digital Surround are registered trademarks or trademarks of DTS, Inc. in the United States and/or other countries. ©DTS, Inc. All Rights Reserved.

HDMI™ HIGH-DEFINITION MULTIMEDIA INTERFACE The terms HDMI and HDMI High-Definition Multimedia Interface, and the HDMI logo are trademarks or registered trademarks of HDMI Licensing LLC in the United States and other countries.

This product contains the iHeartRadio service. iHeartRadio is a registered trademark of iHeartMedia, Inc.

This product is protected by certain intellectual property rights of Microsoft. Use or distribution of such technology outside of this product is prohibited without a license from Microsoft.

The N-Mark is a trademark or registered trademark of NFC Forum, Inc. in the United States and in other countries.

SoundTouch and the wireless note design are registered trademarks of Bose Corporation in the U.S. and other countries.

This product incorporates Spotify software which is subject to 3rd party licenses found here:
www.spotify.com/connect/third-party-licenses

Spotify is a registered trademark of Spotify AB.

Designed with UEI Technology™. Under License from Universal Electronics, Inc. © UEI 2000-2016

Wi-Fi is a registered trademark of Wi-Fi Alliance®.

Bose Corporation Headquarters: 1-877-230-5639

©2017 Bose Corporation. No part of this work may be reproduced, modified, distributed or otherwise used without prior written permission.

Getting Started

Building your entertainment system 10
Unpacking 10
Placement guidelines 11
Mounting the soundbar 12

Setting Up the Soundbar

Cable options 13
Connecting the soundbar to your TV 14
Option 1: HDMI™ ARC (preferred) 14
Option 2: Optical 15
Connecting to power 16
Installing the remote control's batteries 16
Powering on the soundbar 17
Auto-off timer 17
Pairing the soundbar with a bass module or surround speakers (optional) 18

Finishing Soundbar Setup

Turning off your TV speakers 20
Checking for sound 20
About ADAPTiQ® audio calibration 21
Running ADAPTiQ® audio calibration 21

Setting Up the Universal Remote Control

Universal remote control buttons 23
Programming the universal remote control 24
Customizing the power button 25
Resyncing your source and TV 25
Programming a non-Bose remote control 25

Setting Up SoundTouch®

Download and install the SoundTouch® app 26
SoundTouch® Owner's Center 27
Add the soundbar to an existing account 27
Connect the soundbar to a new network 27

Using the SoundTouch® App

Setting a preset 28
Playing a preset 29

Using the Soundbar

Source selection 30
Adjusting the volume 30
Adjusting the bass setting 31
    Resetting the bass setting 31
Function buttons 32
Dialogue mode 32
    Persistent dialogue mode 32
Auto-wake 32

Bluetooth® Technology

Choosing your pairing method 33
Pairing your mobile device 34
Pairing your mobile device with NFC 35
Connecting to a paired device 36
    If you can't stream audio from a paired device 36
Disconnecting a mobile device 36
Reconnecting a mobile device 37
Clearing the soundbar's pairing list 37

Getting System Information

System status indicators 38
Wi-Fi® indicator 38
TV indicator 39
SoundTouch® indicator 39
Bluetooth indicator 40
Connectivity indicator 40
Wi-Fi indicator and Connectivity indicator 40

Advanced Features

Updating system software 41
Disabling Wi-Fi capability 42
Re-enabling Wi-Fi capability 42
Resetting the soundbar 43

Alternate Setup

Alternate setup methods 44
Connecting a source to the soundbar 44
Playing audio directly from a source connected to the soundbar 45
Setting up your soundbar using a computer 46

Care and Maintenance

Cleaning 47
Customer service 47
Limited warranty 47
Technical information 47

Troubleshooting

Common solutions 48
ADAPTiQ® audio calibration error messages 52

Building your entertainment system

The SoundTouch® 300 soundbar is part of a modular home entertainment system. It is compatible with the optional Acoustimass® 300 wireless bass module and Virtually Invisible® 300 wireless surround speakers (not provided). You can wirelessly pair up to two bass modules and the surround speakers to the soundbar at any time for even richer, more immersive sound.

To purchase a bass module or the surround speakers, contact your local Bose® dealer or visit www.Bose.com

Note: The soundbar is also compatible with the Acoustimass wireless bass module. This bass module is available only as part of the SoundTouch® soundbar system, and may not be available in all regions.

Unpacking

Carefully unpack the carton and confirm that the following parts are included:

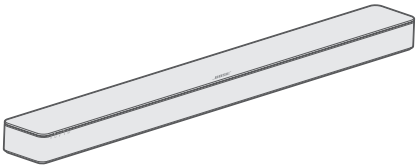

SoundTouch® 300 soundbar

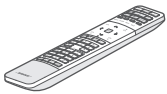

Universal remote control

AAA Battery (2)

ADAPTiQ® headset

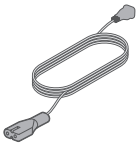

Power cord*

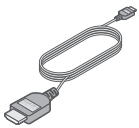

HDMI™ cable

Optical cable

*May ship with multiple power cords. Use the power cord for your region.

Note: If any part is damaged or if the glass on your soundbar is broken, do not use it. Contact your authorized Bose dealer or Bose customer service.

Placement guidelines

To avoid wireless interference, keep other wireless equipment 1 – 3 ft. (0.3 – 0.9 m) away from the system. Place the system outside and away from metal cabinets, other audio/video components and direct heat sources.

- Place the soundbar directly below (preferred) or above your TV with the speaker grille facing into the room.
- Place the soundbar on its rubber feet on a stable and level surface. For proper support, both feet must be resting on the surface. Vibration can cause the soundbar to move, particularly on smooth surfaces like marble, glass or highly polished wood.
- Keep the back side of the soundbar at least 0.4 in. (1 cm) from any other surface. Blocking the ports on this side affects acoustic performance.
- Do NOT place any objects on top of the soundbar.
- Make sure there is an AC (mains) outlet nearby.
- For best sound quality, do not place the soundbar in an enclosed cabinet or diagonally in a corner.
- If placing the soundbar in an enclosed cabinet or on a shelf or TV stand, position the front of the soundbar as close as possible to the front edge of the shelf for optimal acoustic performance.

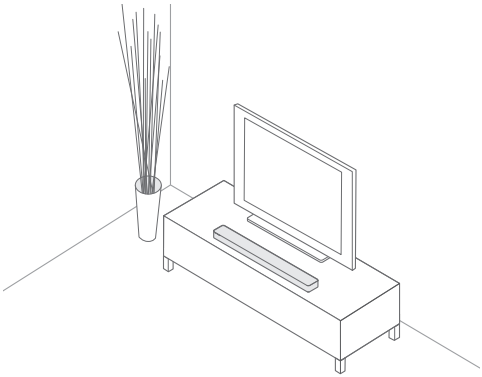

CAUTION: Do not place the soundbar on its front, back or top when in use.

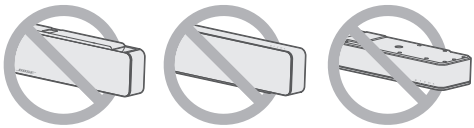

Mounting the soundbar

You can mount the soundbar on a wall. To purchase the WB-300 wall bracket, contact your local Bose® dealer or visit www.Bose.com

CAUTION: Do not use any other hardware to mount the soundbar.

Cable options

Connect the soundbar to your TV using one of two cable options:

- Option 1: HDMI™ ARC (preferred)
- Option 2: Optical

Note: The preferred option is to connect the soundbar to your TV's HDMI ARC or Audio Return Channel connector using the HDMI cable.

1. On the back of your TV, locate the **HDMI IN** and **Audio OUT** (digital) connector panels.

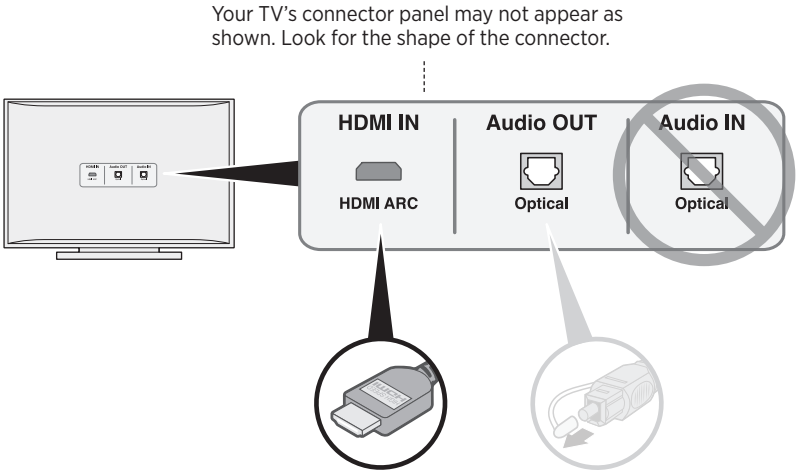

Option 1: HDMI™ ARC (preferred)
Use the HDMI cable for this connection.

Option 2: Optical
If your TV doesn't have an HDMI ARC connector, use the optical cable for this connection.

2. Choose an audio cable.

Note: If your TV does not have an HDMI ARC or optical connector, see page 48.

Connecting the soundbar to your TV

After choosing an audio cable, connect the soundbar to your TV.

Option 1: HDMI™ ARC (preferred)

1. Insert one end of the HDMI™ cable into your TV's **HDMI ARC** connector.

   Note: If you don't connect to your TV's **HDMI ARC** or **Audio Return Channel** connector, you won't hear audio from the soundbar. If your TV does not have an HDMI ARC connector, see "Option 2: Optical" on page 15.

2. Insert the other end of the cable into the **HDMI OUT TO TV (ARC)** connector on the soundbar.

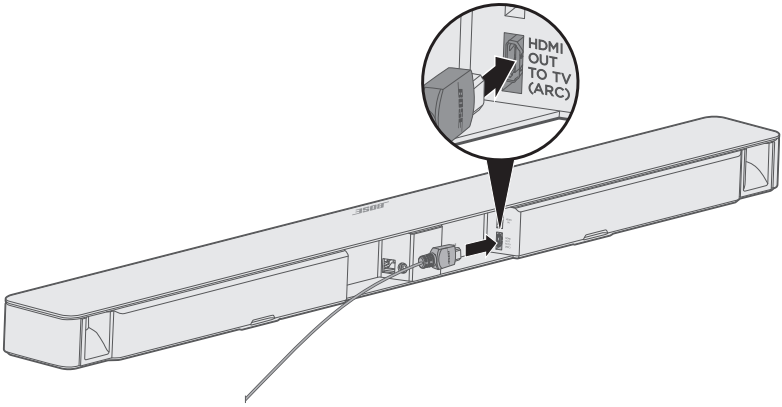

Option 2: Optical

If your TV doesn't have an HDMI™ ARC connector, use the optical cable to connect the soundbar to your TV.

CAUTION: Make sure you have removed the protective cap from both ends of the optical cable. Inserting the plug in the wrong orientation can damage the plug and/or the connector.

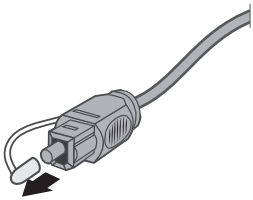

1. Insert one end of the optical cable into your TV's **Optical OUT** connector.
2. Hold the plug at the other end of the optical cable with the Bose® logo facing down.
3. Align the plug with the soundbar's **OPTICAL IN** connector and insert the plug carefully.

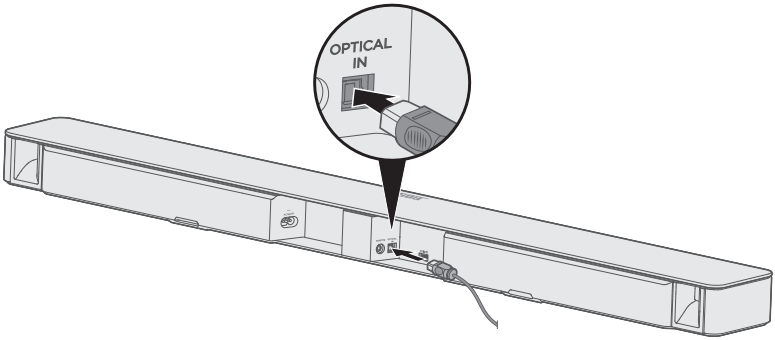

Note: The connector has a hinged door that swings inward when inserting the plug.

4. Firmly push the plug into the connector until you hear or feel a click.

Connecting to power

1. Plug one end of the power cord into the POWER connector on the back of the soundbar.
2. Plug the other end of the power cord into a live AC (mains) outlet.

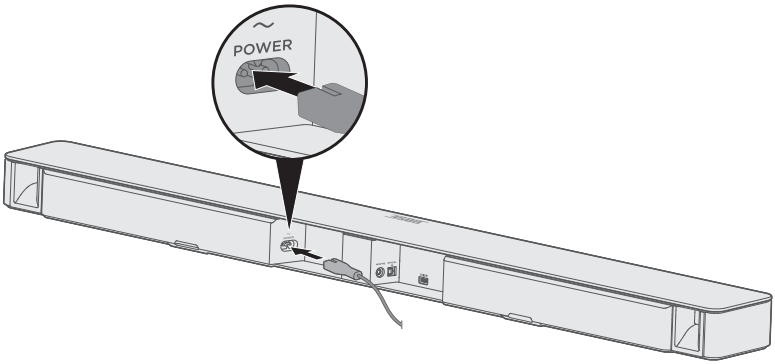

Installing the remote control's batteries

1. Slide open the battery compartment cover on the back of the remote control.
2. Insert the two provided AAA (IEC-LR3) 1.5V batteries. Match the **+** and **–** symbols on the batteries with the **+** and **–** markings inside the compartment.
3. Slide the battery compartment cover back into place.

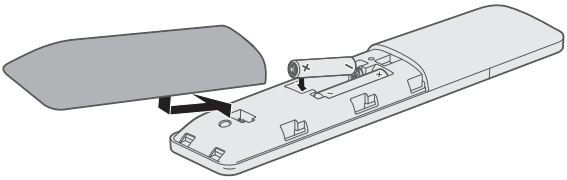

Powering on the soundbar

On the remote control, press ⏻ .

The soundbar powers on.

Note: The soundbar defaults to TV ▭ the first time it's powered on. Otherwise, the soundbar defaults to your last used source.

Auto-off timer

The auto-off timer conserves power when the soundbar is not in use. The soundbar switches off when audio has stopped and buttons have not been pressed for 20 minutes.

Note: To disable the auto-off timer, use the SoundTouch® app.

Pairing the soundbar with a bass module or surround speakers (optional)

If you have the optional Acoustimass® 300 wireless bass module, Acoustimass wireless bass module (included in the SoundTouch® soundbar system) or Virtually Invisible® wireless surround speakers, you can pair them with the soundbar now or later.

Notes:

- Pairing now instead of later prevents you from having to repeat certain steps, such as running ADAPTiQ® audio calibration.
- You'll need to pair the bass module and surround speakers separately.
- You can pair up to two Acoustimass 300 wireless bass modules with the soundbar. For more information, refer to the Acoustimass 300 owner's guide. Visit: global.Bose.com/Support/AM300
- The Acoustimass wireless bass module is available only as part of the SoundTouch® soundbar system, and may not be available in all regions.

1. Connect either a bass module or the surround speakers to power. Refer to the Acoustimass 300, Virtually Invisible® 300 or Acoustimass wireless bass module owner's guide.

2. On the remote control, press the SoundTouch® button .

3. Press and hold **7** until the connectivity indicator on the soundbar blinks white.

   Once paired, the bass module or surround speakers emit a tone and on the soundbar glows white.

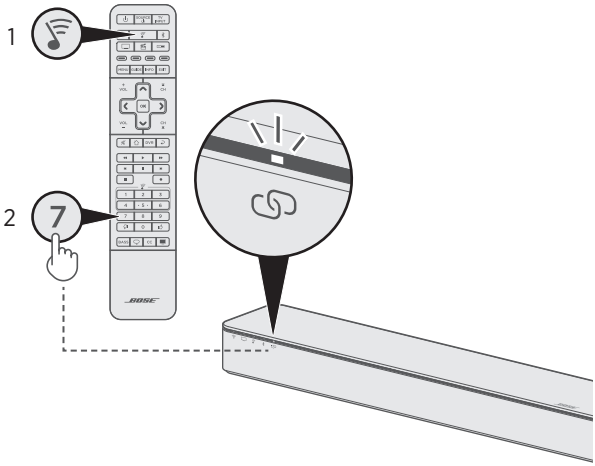

4. Repeat steps 1 – 3 until all bass modules and surround speakers are paired.

   Notes:

   - Pairing may take several minutes.
   - If the soundbar doesn't pair with the bass module or surround speakers, see "Troubleshooting" on page 49.

Turning off your TV speakers

To avoid hearing distorted audio, turn off your TV speakers.

Refer to your TV owner's guide for more information.

Checking for sound

1. Power on your TV.
2. If you are using a cable/satellite box or other secondary source:
   - Power on this source.
   - If your secondary source is connected to your TV, select the appropriate TV input. If you have not programmed the remote control, you may need to use a different remote.
3. Power on the soundbar.

   You should hear sound coming from the soundbar.
4. Press 🔇 on the remote control.

   You should not hear sound coming from the TV speakers or soundbar.

   Note: If you don't hear sound coming from the soundbar or do hear sound coming from your TV speakers, see page 48.

About ADAPTiQ® audio calibration

After setting up your soundbar and pairing the optional bass module or surround speakers, run ADAPTiQ® audio calibration for best acoustic performance. ADAPTiQ audio calibration customizes the sound of the soundbar to the acoustics of your listening area by taking five audio measurements. To run an audio calibration, you need 10 minutes when the room is quiet.

During ADAPTiQ audio calibration, a microphone on the top of the provided ADAPTiQ headset measures the sound characteristics of your room to determine optimal sound quality.

Running ADAPTiQ® audio calibration

1. Insert the ADAPTiQ headset cable into the **ADAPTiQ** connector on the back of the soundbar.

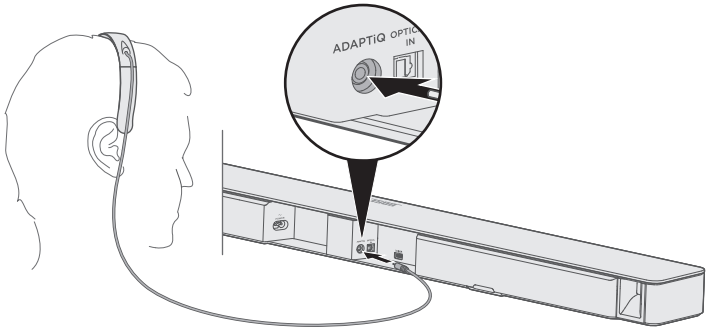

2. Put the ADAPTiQ headset on your head.
3. On the remote control, press the SoundTouch® button .

4. Press and hold **8** until the TV indicator ▭ and the *Bluetooth* indicator ✱ on the soundbar glow green.

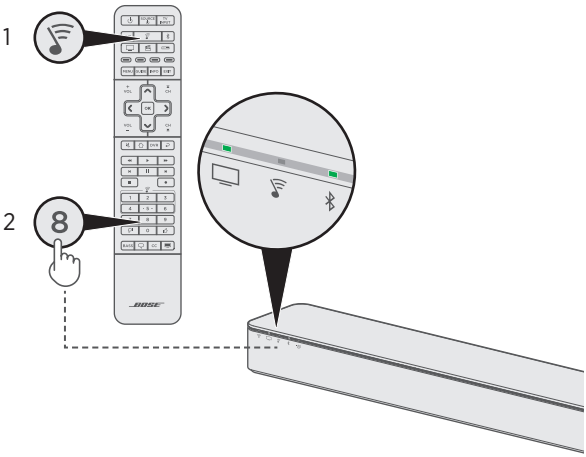

The ADAPTiQ® process begins.

Note: If you don't hear your language, press ⌃ and ⌄ on the navigation pad (see page 23) to cycle through languages. To reset the language, press and hold **8** for 10 seconds.

5. Follow the voice prompts until the ADAPTiQ process is complete.

   If you hear an error message and are unable to complete ADAPTiQ audio calibration, see "ADAPTiQ® audio calibration error messages" on page 52.

6. Unplug the ADAPTiQ headset from the soundbar and store it in a safe place.

   If you later pair the optional bass module or surround speakers, move or mount the soundbar or move any furniture, run ADAPTiQ audio calibration again to ensure optimal sound quality.

Universal remote control buttons

Use the remote control to control sources connected to your TV or soundbar, adjust the volume and bass, change channels, use dialogue mode, use playback functions and enable cable/satellite box functions.

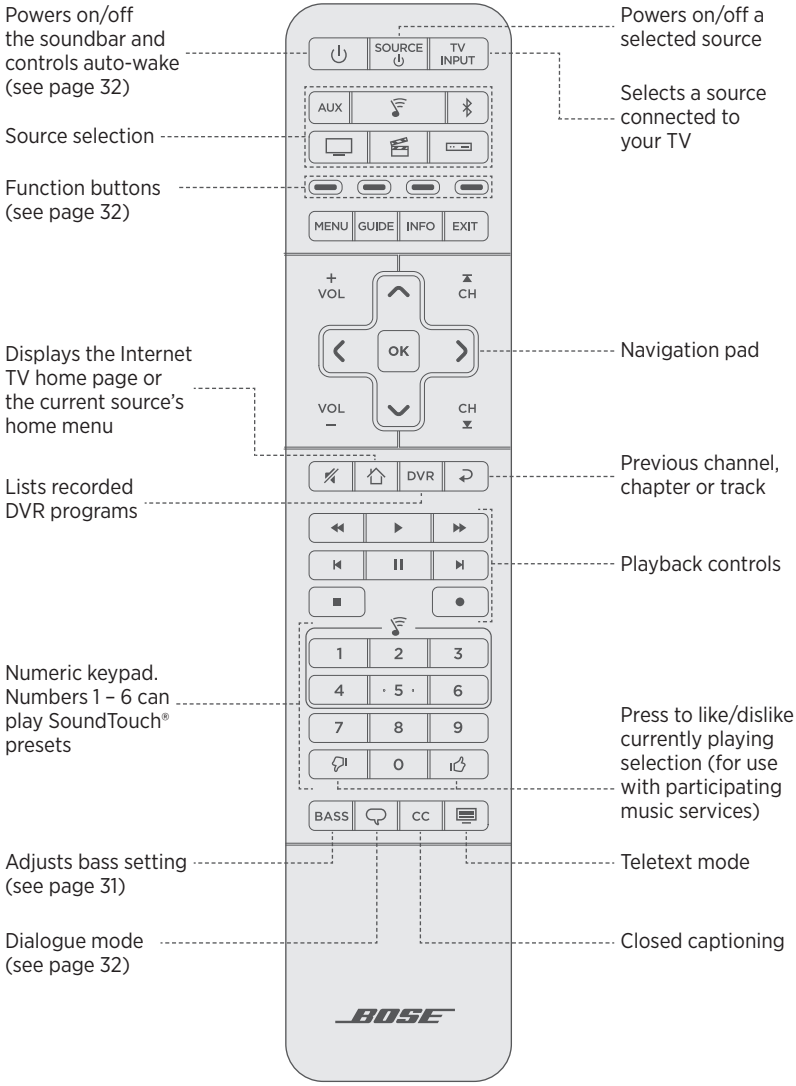

Programming the universal remote control

The universal remote control has four programmable source buttons (▭, AUX, ▭ and ▭). You can program these buttons to control your TV, cable/satellite box, DVD or Blu-ray Disc™ player, game system, DVR or other auxiliary source by entering the code for your source's brand. There may be several codes for your source. You may need to perform this procedure multiple times to locate the correct code.

Locate the code

1. Power on your source.
2. Locate the code for your source's brand in the Universal Remote Control Setup Guide (provided).

Enter the code

1. On the remote control, press and hold the appropriate source button (▭, AUX, ▭ or ▭) until all six source buttons glow, then release. For example, to program your TV, press and hold ▭ until all six source buttons glow, then release.

   The appropriate source button continues to glow.
2. On the number keypad, enter the code for your source's brand and press VOL +.

Test the code

1. Test the source for basic functions by following the instructions for your source:
   - **TV**: press the channel buttons. Press MENU. The settings menu appears. Press ⟪ and ⟫ to navigate.
   - **Cable/satellite box**: press GUIDE. The programming guide appears. Press ⟪ and ⟫ to navigate.
   - **DVD or Blu-ray Disc™ player**: press GUIDE. The settings menu appears. Press ⟪ and ⟫ to navigate.
   - **Game system**: press ⟪ and ⟫ to navigate through your menu.
2. Based on your source's response to basic functions:
   - **Remote responds accurately**: press EXIT to exit programming and save your settings.
   - **Remote does not respond or does not respond accurately**:
     - **If your source button glows**: press VOL + to move to the next code. Repeat steps 1 - 2 in "Test the code." You may need to repeat this procedure 30 or more times. If all six buttons blink three times, you have cycled through all codes for your source.
     - **If your source button is off**: your remote exited programming mode. Repeat steps 1 - 2 in "Enter the code" and steps 1 - 2 in "Test the code."

Note: Your source may not be compatible with universal remote controls or may not accept IR (infrared) signals. Refer to your source owner's guide for more information.

Customizing the power button

You can customize the power button ⏻ on your remote control to power on/off your soundbar, TV and another source simultaneously.

1. Program your remote control to control your TV and source (see page 24).
2. Press and hold ▭ and the appropriate source button simultaneously for 10 seconds until both buttons flash three times.

Resyncing your source and TV

After customizing the power button, your source and TV may become out of sync and not power on/off simultaneously. Use the following steps to resync the system.

1. Press the source button for the source that is out of sync.
2. Press SOURCE ⏻ to power on/off the source.
3. Press ⏻.

   Your sources power on/off simultaneously.

Programming a non-Bose remote control

You can program a non-Bose remote control, such as your cable/satellite box remote, to control the soundbar. Refer to your non-Bose remote control owner's guide or cable/satellite website for instructions.

Once programmed, the non-Bose remote controls basic functions such as power on/off and volume.

Note: The non-Bose remote must be able to send IR (infrared) signals to control the soundbar.

The SoundTouch® app lets you set up and control SoundTouch® from your smartphone, tablet or computer. Using the app, your smart device acts as a remote for the soundbar.

From the app, you can manage your SoundTouch® settings, add music services, explore local and global Internet radio stations, set and change presets and stream music. New features are added periodically.

Note: If you have already set up SoundTouch® for another speaker, see “Add the soundbar to an existing account” on page 27.

Download and install the SoundTouch® app

On your smartphone or tablet, download the Bose® SoundTouch® app.

SoundTouch® app

- **Apple users**: download from the App Store
- **Android™ users**: download on the Google Play™ store
- **Amazon Kindle Fire users**: download from the Amazon Appstore for Android

Download on the App Store | GET IT ON Google Play | amazon apps Available at amazon

Follow the instructions in the app to complete setup, including adding the soundbar to your Wi-Fi network, creating a SoundTouch® account, adding a music library and using music services.

Once you set up the soundbar on your home Wi-Fi network, you can control it from any smartphone or tablet on the same network.

Note: For instructions on using a computer for setup, see page 46.

Tip: Once you set up the soundbar on your home Wi-Fi network, you can control it from any smartphone or tablet on the same network. Download the SoundTouch® app on the smart device. You must use the same SoundTouch® account for all devices connected to your soundbar.

SoundTouch® Owner's Center

global.Bose.com/Support/ST300

This website provides access to the owner support center, which includes: owner's manuals, articles, tips, tutorials, a video library, and the owner community where you can post questions and answers.

Add the soundbar to an existing account

If you have already set up SoundTouch® on another speaker, you do not need to download the SoundTouch® app again.

From within the app, select ☰ **> Settings > Add or Reconnect Speaker**.

The app guides you through setup.

Connect the soundbar to a new network

If your network information changes, add your soundbar to your new network. You can do this by putting your soundbar into setup mode.

1. From within the app, select ☰ **> Settings > Speaker Settings** and select your soundbar.
2. Select **CONNECT SPEAKER**.

   The app guides you through setup.

You can personalize six presets to your favorite streaming music services, stations, playlists, artists, albums or songs from your music library. You can access your music, at any time, with a simple touch of a button using the SoundTouch® app.

Before using presets, note the following:

- You can set presets from the app and the remote control.
- If the preset source is your music library, make sure the computer storing your music library is on and connected to the same network as the soundbar.
- You cannot set presets to a *Bluetooth* stream.

Setting a preset

1. Stream music to the soundbar using the app.
2. On the remote control, press the SoundTouch® button .
3. While the music is playing, press and hold a preset (1 – 6) on the remote control until the soundbar emits a tone.

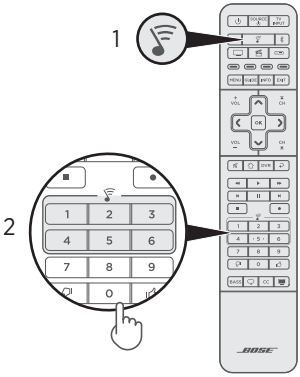

Note: For information on using the SoundTouch® app to set and change your presets, visit global.Bose.com/Support/ST300

Playing a preset

Once you personalize your presets, press a preset on the remote control to play music.

1. On the remote control, press the SoundTouch® button .
2. Press a preset (1 – 6) on the remote control to play that preset.

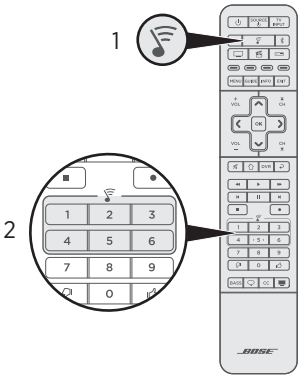

Note: If you don't hear music and the SoundTouch® indicator on the soundbar double blinks amber, see "Setting a preset" on page 28.

Source selection

You can switch between sources by selecting different inputs on your TV using the remote control. For information on connecting to a device paired via *Bluetooth*, see page 36.

Notes:

- Before you begin, make sure you have correctly programmed the remote control to control your sources (see page 24).
- Pressing , AUX, or on the remote control does not switch the source. It turns on the soundbar and changes the mode of the remote so that the remote can control your source's functions.

1. Press the button for the source you want to control.

   The source button glows.

2. Press SOURCE .

   The source powers on.

3. If the source is connected to your TV, press TV INPUT and select the correct input on your TV.

Adjusting the volume

On the remote control:

- Press + VOL to increase the volume.
- Press VOL − to decrease the volume.
- Press to mute or unmute the audio.

Adjusting the bass setting

You can adjust the soundbar's bass setting using the SoundTouch® app or the remote control. For details on the SoundTouch® app, see page 26.

1. On the remote control, press **BASS**.

   The indicators on the soundbar glow to show the current bass setting, as shown below.

Bass setting	Indicator activity
+4	
+3	
+2	
+1	
0 (default)	
-1	
-2	
-3	
-4	

2. On the remote control:
   - Press VOL + to increase the bass.
   - Press VOL – to decrease the bass.
3. Press **BASS**. The soundbar saves your settings.

Note: For optimal sound quality for dialogue-only programs, such as news and talk shows, see "Dialogue mode" on page 32.

Resetting the bass setting

On the remote control, press and hold **BASS** until the SoundTouch® indicator on the soundbar blinks twice.

The bass setting resets to original factory settings.

Function buttons

The red, green, yellow and blue buttons on the remote control correspond with the color-coded function buttons on your cable/satellite box or teletext functions.

- **Cable/satellite box functions**: refer to your cable/satellite box owner's guide.
- **Teletext functions**: correspond with color-coded page numbers, headings or shortcuts on a teletext display.

Dialogue mode

Dialogue mode improves the clarity of dialogue and vocals in movies, TV programs and podcasts by adjusting the tonal balance of the system.

On the remote control, press the dialogue mode button 🗨 to toggle between dialogue mode and your default audio settings.

The status indicator for the current source glows green when dialogue mode is enabled (see page 38).

Note: Turning off the soundbar disables dialogue mode.

Persistent dialogue mode

You can set the system so that turning off the soundbar doesn't disable dialogue mode.

To enable or disable persistent dialogue mode, on the remote control, press and hold 🗨 until the status indicator for the current source double blinks green (see "System status indicators" on page 38).

Auto-wake

You can set the soundbar to power on whenever a sound signal is received. This is most useful when connecting to the TV using the optical cable, as most HDMI™ ARC connections enable this feature by default.

To toggle between auto-wake and default power settings, on the remote control, press and hold ⏻ until the soundbar emits a tone. A rising tone means that auto-wake is enabled, and a falling tone means that auto-wake is disabled.

Bluetooth wireless technology lets you stream music from mobile devices such as smartphones, tablets and laptop computers. Before you can stream music from a mobile device, you must pair the mobile device with the soundbar.

Choosing your pairing method

You can pair your mobile device with the soundbar using *Bluetooth* wireless technology or Near Field Communication (NFC).

What is NFC?

NFC uses *Bluetooth* technology to let two devices establish wireless communication with each other by simply tapping the devices together. Refer to your mobile device owner's guide to see if your model supports NFC.

If your mobile device does not support *Bluetooth* pairing via NFC or if you are unsure:	Follow the instructions for "Pairing your mobile device" on page 34.
If your mobile device supports *Bluetooth* pairing using NFC:	Follow the instructions for "Pairing your mobile device with NFC" on page 35.

Note: If your device supports *Bluetooth* pairing via NFC, you can use either pairing method.

Pairing your mobile device

1. On the remote control, press and hold the *Bluetooth* button ᛒ until the *Bluetooth* indicator ᛒ on the soundbar blinks blue.

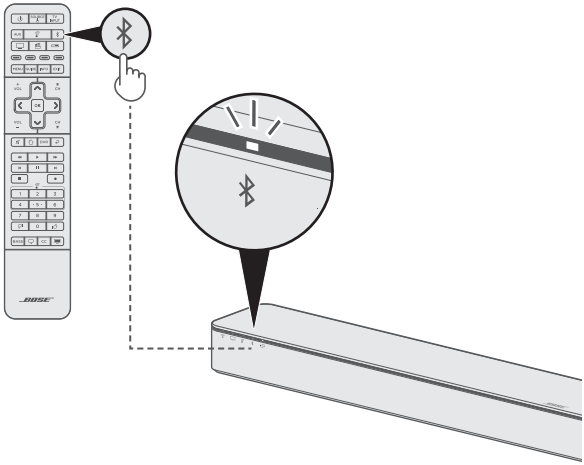

2. On your mobile device, turn on the *Bluetooth* feature.

   Tip: The *Bluetooth* feature is usually found in the Settings menu.

3. Select your SoundTouch® soundbar from the device list.

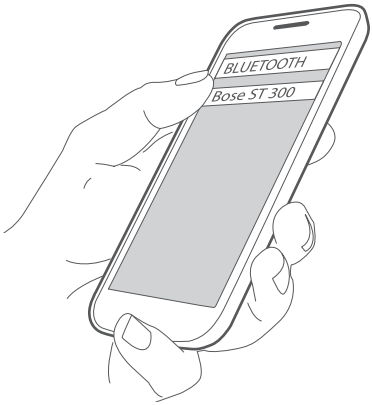

Once paired, ᛒ on the soundbar glows solid white, the soundbar emits a tone and the soundbar's name appears connected in the device list.

Pairing your mobile device with NFC

1. With the soundbar powered on, unlock your mobile device and turn on the *Bluetooth* and NFC features. Refer to your mobile device owner's guide to learn more about these features.

2. Gently tap the NFC touchpoint on your mobile device to the top of the soundbar behind the Bose® logo.

   Your mobile device may prompt you to accept pairing.

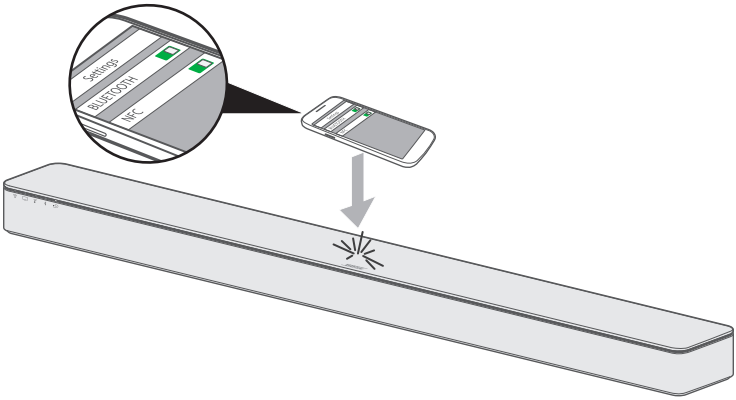

   Once paired, the *Bluetooth* indicator ᛒ on the soundbar glows solid white and the soundbar emits a tone.

Connecting to a paired device

You can stream audio from a mobile device to the soundbar.

Note: If there are multiple mobile devices stored in the soundbar's pairing list, it may take a minute or two for the paired device to connect. The soundbar's *Bluetooth* indicator shows connection status (see page 38).

1. On the remote control, press the *Bluetooth* button ᛒ.

   The soundbar connects to the last mobile device that streamed to the soundbar.

2. On the mobile device, play music.

If you can't stream audio from a paired device

The soundbar may have lost the connection to the mobile device. Check the soundbar's *Bluetooth* indicator. If the paired device is out of range of the soundbar, move the device within range.

Disconnecting a mobile device

- Turn off the *Bluetooth* feature on your mobile device.
- If your mobile device supports NFC, tap the NFC touchpoint on your mobile device to the top of the soundbar behind the Bose® logo.

Reconnecting a mobile device

- When powered on, the soundbar tries to reconnect with the most recently-connected mobile device.

  Note: The mobile device must be within range and powered on.

- If your mobile device supports NFC, tap the NFC touchpoint on your mobile device to the top of the soundbar behind the Bose® logo.

Clearing the soundbar's pairing list

You can store up to eight paired mobile devices in the soundbar's pairing list.

1. On the remote control, press and hold the *Bluetooth* button ᛒ for 10 seconds until the *Bluetooth* indicator ᛒ on the soundbar double blinks white. The soundbar emits a tone.

2. Delete your SoundTouch® 300 soundbar from the *Bluetooth* list on your mobile device.

   All mobile devices are cleared and the soundbar is ready to pair a new mobile device.

System status indicators

The front of the soundbar has a series of indicators that show system status.

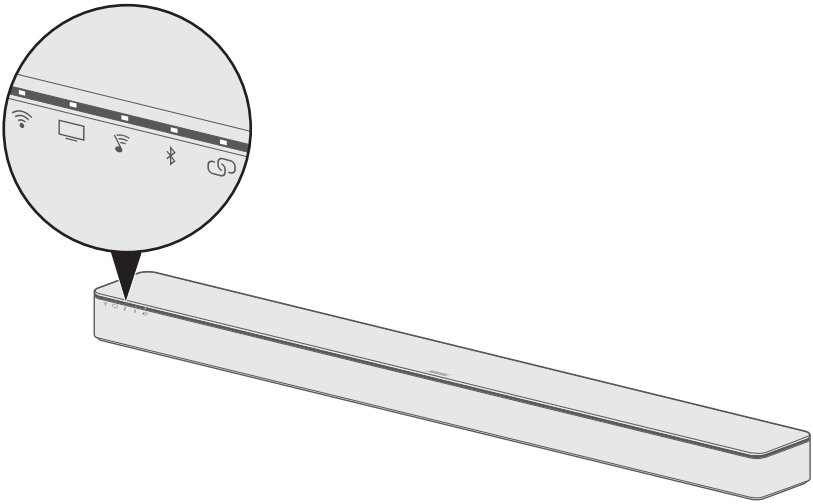

Wi-Fi indicator

Shows the Wi-Fi connection status of the system.

Indicator activity	System state
Blinking white	Connecting to Wi-Fi network.
Solid white (dim)	Power saving mode and connected to Wi-Fi network.
Solid white (bright)	System is on and connected to Wi-Fi network.
Amber	System is in setup mode.
Blinking white simultaneously with Connectivity indicator	Updating system software. **Note:** The update may take 10 or more minutes.

TV indicator

Shows the connection status of the TV source and all sources connected to your TV or the soundbar.

Indicator activity	System state
White	TV, **AUX**, or is selected as the current source.
Solid green	TV, **AUX**, or is selected as the current source and dialogue mode is enabled.
Double blink green	TV, **AUX**, or is selected as the current source and persistent dialogue mode is enabled.

SoundTouch® indicator

Indicator activity	System state
Blinking white	Connecting to a SoundTouch® source.
Solid white	System is playing a SoundTouch® source.
Solid amber	• Station or library not found. • Invalid account. • General error. • Station or service unavailable.
Double blink amber	• Preset empty. • Skip limit reached.
Solid green	SoundTouch® is selected as the current source and dialogue mode is enabled.
Double blink green	SoundTouch® is selected as the current source and persistent dialogue mode is enabled.

Bluetooth indicator

Shows the connection status for mobile devices paired via *Bluetooth*.

Indicator activity	System state
Blinking blue	Ready to connect
Blinking white	Connecting
Double blink white	Pairing list cleared
Solid white	Connected
Solid green	Connected and dialogue mode is enabled
Double blink green	Connected and persistent dialogue mode is enabled

Connectivity indicator

Shows the connection status between the soundbar and the optional Acoustimass® 300 wireless bass module, Acoustimass wireless bass module (included in the SoundTouch® soundbar system) or Virtually Invisible® 300 wireless surround speakers.

Indicator activity	System state
Blinking white	Connecting.
Solid white	Connected to the bass module, surround speakers or both.
Solid amber	Disconnected from the bass module, surround speakers or both.
Blinking amber	Both surround speakers are set to the same channel, such as **L** (left) or **R** (right).
Blinking white simultaneously with Wi-Fi indicator	Updating system software. **Note:** The update may take 10 or more minutes.

Wi-Fi indicator and Connectivity indicator

Shows the status of the system software update.

Indicator activity	System state
Blinking white	Updating system software. **Note:** The update may take 10 or more minutes.

Updating system software

The SoundTouch® app alerts you when a software update is available for the soundbar. You can update the system software using the app or the remote control.

1. On the remote control, press the SoundTouch® button.

2. Press and hold the Closed Captioning button **CC** until the Wi-Fi indicator, TV indicator, SoundTouch® indicator and *Bluetooth* indicator on the soundbar blink white.

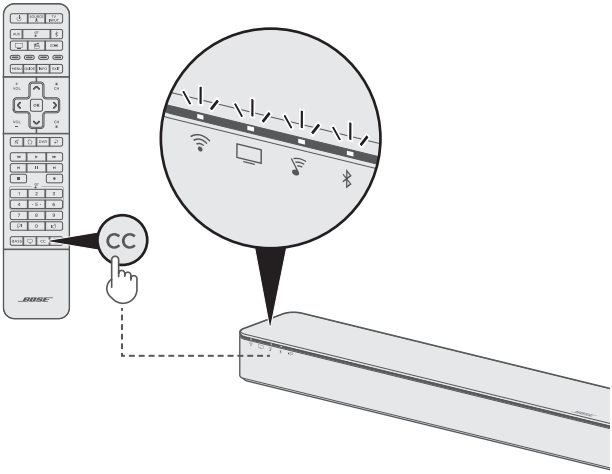

The soundbar reboots when the update is complete.

Note: The update may take 10 or more minutes.

Disabling Wi-Fi capability

1. On the remote control, press the SoundTouch® button .
2. Press and hold **O** until the Wi-Fi indicator , TV indicator , SoundTouch® indicator and *Bluetooth* indicator on the soundbar blink white.

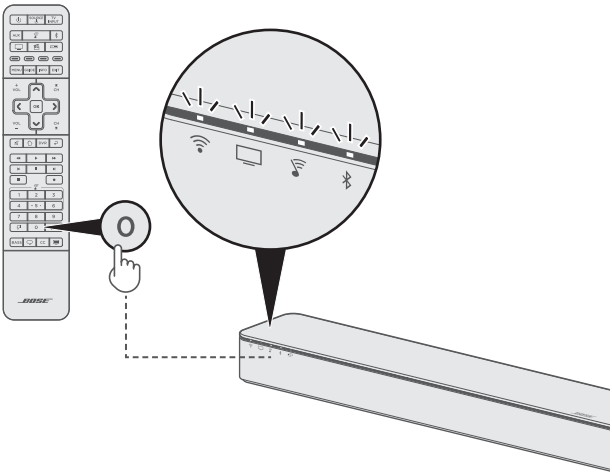

When Wi-Fi is disabled, on the soundbar turns off.

Re-enabling Wi-Fi capability

1. On the remote control, press the SoundTouch® button .
2. Press and hold **O** until , , , and on the soundbar blink white.

Resetting the soundbar

Factory reset clears all source, volume, network and ADAPTiQ® audio calibration settings from the soundbar and returns it to original factory settings.

1. On the remote control, press the SoundTouch® button.

2. Press and hold the TeleText button for 10 seconds until the Wi-Fi indicator, TV indicator, SoundTouch® indicator and *Bluetooth* indicator on the soundbar blink white.

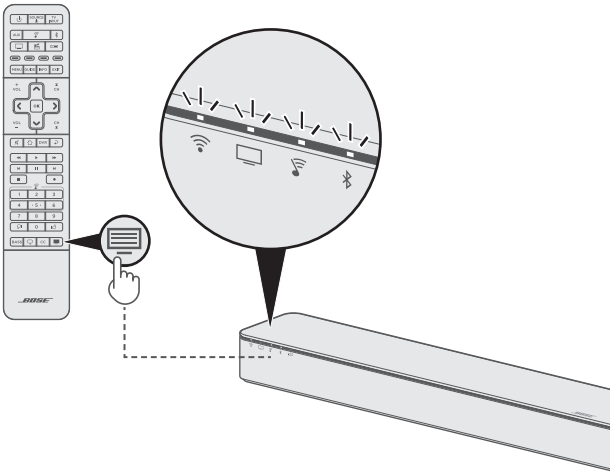

The soundbar reboots and on the soundbar glows amber (setup mode) when the reset is complete.

3. To restore the soundbar's network and audio settings:
   - Launch the SoundTouch® app on your smartphone or tablet and add the system to your network (see page 26).
   - Run ADAPTiQ audio calibration (see page 21).

Alternate setup methods

You may need to use an alternate setup method to resolve the following problems:

Symptom	Solution
No available HDMI™ inputs on your TV for sources	Follow the instructions for “Connecting a source to the soundbar” on page 44.
No sound or poor sound quality from a source connected to your TV	Follow the instructions for “Playing audio directly from a source connected to the soundbar” on page 45.
Can’t set up the SoundTouch® app on a smartphone or tablet	Follow the instructions for “Setting up your soundbar using a computer” on page 46.

Connecting a source to the soundbar

Some TVs have too few HDMI inputs for all of your sources.

If the soundbar is connected to your TV’s HDMI ARC connector, you can resolve this problem by connecting one source to the soundbar’s HDMI IN connector with a second HDMI cable (not provided).

Note: Make sure that the soundbar is connected to your TV’s HDMI ARC connector before connecting a source to the soundbar. If the soundbar is connected to your TV’s optical connector only, you won’t see video from the source.

1. Insert one end of an HDMI cable into your source’s **HDMI (OUT)** connector.
2. Insert the other end of the HDMI cable into the **HDMI IN** connector on the back of the soundbar.

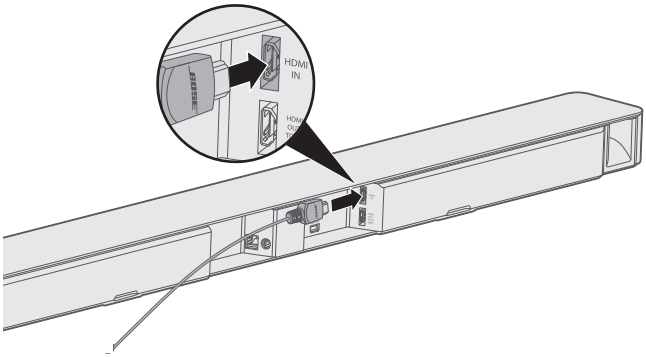

3. Program the universal remote control to control your source (see page 24).
4. Select your source using the remote control (see page 30).

   Note: You must select the TV input to which the soundbar is connected.

Playing audio directly from a source connected to the soundbar

Some TVs don't deliver audio from connected sources to the soundbar. Other TVs reduce the quality of surround sound audio from connected sources before delivering it to the soundbar.

This can cause you to hear no sound or poor sound quality from a source connected to your TV.

To resolve these problems, you can connect the source to the soundbar's HDMI IN connector and select the appropriate settings in the SoundTouch® app to play surround sound audio directly from the source.

1. Connect a source to the soundbar (see page 44).

2. Select the appropriate system settings in the SoundTouch® app to play surround sound audio directly from the source. For more information, visit global.Bose.com/Support/ST300

Setting up your soundbar using a computer

You can set up your soundbar using a computer rather than a smartphone or tablet.

Before you begin

- Position your soundbar next to your computer.
- Make sure your computer is on your Wi-Fi network.
- Obtain a USB A to USB Micro B cable (not provided).

Notes:

- A USB A to USB Micro B cable is commonly used for charging mobile devices. You can also purchase this part at your local electronics store.
- The USB connector on the back of your soundbar is for computer setup only. The USB connector is not designed to charge smartphones, tablets, similar devices or the soundbar itself.

Computer Setup

During setup, the app prompts you to temporarily connect the USB cable from the computer to your soundbar. Do not connect the USB cable until the app instructs you to do so.

1. Plug the power cord into an AC (mains) power outlet.
2. On your computer, open a browser and go to:

   global.Bose.com/Support/ST300

   Tip: Use the computer where your music library is stored.
3. Download and run the SoundTouch® app.

   The app guides you through setup.
4. After setup is complete, disconnect the USB cable from your computer and from your soundbar. Move your soundbar to its permanent location.

Cleaning

Do not allow liquids to spill onto the system or into any openings.

- Clean the exterior of the system with the provided cleaning cloth or another soft, dry cloth.
- Do not use any sprays near the system.
- Do not use any solvents, chemicals or cleaning solutions containing alcohol, ammonia or abrasives.
- Do not allow objects to drop into any openings.

Customer service

For additional help using the system:

- Visit global.Bose.com/Support/ST300
- Contact Bose customer service.

Limited warranty

Your soundbar is covered by a limited warranty. Visit our website at global.Bose.com/warranty for details of the limited warranty.

To register your product, visit global.Bose.com/register for instructions. Failure to register will not affect your limited warranty rights.

Technical information

Input power rating: 100-240V ∿ 50/60 Hz, 65W

If you experience problems with your soundbar:

- Connect the soundbar and optional bass module or surround speakers to AC (mains) power.
- Secure all cables.
- Verify the state of the system status indicators (see page 38).
- Move the soundbar and optional bass module or surround speakers away from possible interference (wireless routers, cordless phones, televisions, microwaves, etc.).
- Move the soundbar within the recommended range of your wireless router or mobile device for proper operation.
- Place the soundbar according to the placement guidelines (see page 11).

If you could not resolve your issue, see the table below to identify symptoms and solutions to common problems. If you are unable to resolve your issue, contact Bose customer service.

Common solutions

The following table lists symptoms and possible solutions to common problems.

Symptom	Solution
No HDMI™ ARC or optical connector on your TV	• Connect to your TV using an audio converter and separate audio cable, such as a coaxial, 3.5 mm or analog stereo cable (not provided). The type of converter and cable you need depends on the audio output connectors available on your TV.
No power	• Unplug the power cords for the soundbar and optional bass module or surround speakers, wait 15 seconds and plug them firmly into a live AC (mains) outlet. • Use the remote control to power on the soundbar (see page 17).
Remote control is inconsistent or does not work	• Point the remote control at the soundbar, making sure that there are no objects in the way. • Match the **+** and **–** symbols on the batteries with the **+** and **–** markings inside the compartment (see page 16). • Replace the batteries (see page 16). • Press the volume button on the remote control and see if the correct source button flashes. • If you have programmed the remote control to control your source: – Point the remote control at the appropriate source. – Make sure you have entered the correct code for your source's brand. – Program the remote control with another code (see page 24).

Symptom	Solution
Soundbar doesn't pair with Acoustimass® 300 wireless bass module, Acoustimass wireless bass module (included in the SoundTouch® soundbar system) or Virtually Invisible® 300 wireless surround speakers	• Unplug the power cords for the soundbar, bass module and surround speakers, wait 15 seconds and plug them firmly into a live AC (mains) outlet. • Repeat the pairing process (see page 18). • If you have the Acoustimass wireless bass module (included in the SoundTouch® soundbar system) and the bass module was previously paired with the soundbar, reset the bass module's connection to the soundbar. Refer to the Acoustimass wireless bass module owner's guide. Visit: global.Bose.com/Support/SSS • Connect the bass module to the soundbar using a 3.5 mm stereo cable (refer to the Acoustimass® 300 or Acoustimass wireless bass module owner's guides online). If you don't have a 3.5 mm stereo cable (commonly used for headphones and mobile devices), contact Bose® customer service to receive this part. You can also purchase this part at your local electronics store.
Intermittent or no audio from soundbar	• Unmute the soundbar. • Increase the volume. • Unplug the power cords for the soundbar and optional bass module or surround speakers, wait 15 seconds and plug them firmly into a live AC (mains) outlet. • Make sure that the soundbar's HDMI™ cable is inserted into a connector on your TV labeled **ARC** or **Audio Return Channel**. If your TV does not have an HDMI ARC connector, connect to the soundbar using the optical cable (see page 15). • If the soundbar is connected to your TV's HDMI ARC connector, make sure that **Consumer Electronics Control (CEC)** is enabled in your TV system menu. Your TV may refer to CEC by a different name. For more information, refer to your TV owner's guide. • Disconnect the soundbar's HDMI cable from your TV's HDMI ARC connector and reconnect it. • Turn off your TV speakers (refer to your TV owner's guide). • Insert the optical cable into a connector on your TV labeled **Output** or **OUT**, not Input or IN. • If your source is connected to your TV: – Select the correct TV input (see page 30). – Make sure that your TV can output audio from connected sources and that audio output is enabled (refer to your TV owner's guide). – Connect your source to the soundbar and select the appropriate settings in the SoundTouch® app to play surround sound audio directly from the source (see page 45).

Symptom	Solution
No audio from Acoustimass® 300 bass module or Virtually Invisible® 300 surround speakers	• Update the system software: 1. On the remote control, press the SoundTouch® button . 2. Press and hold the Closed Captioning button **CC** until the Wi-Fi indicator , TV indicator , SoundTouch® indicator and *Bluetooth* indicator on the soundbar blink white. **Note:** The update may take 10 or more minutes.
Sound is coming from your TV speaker	• Make sure that the soundbar's HDMI cable is inserted into a connector on your TV labeled **ARC** or **Audio Return Channel**. If your TV does not have an HDMI ARC connector, connect to the soundbar using the optical cable (see page 15). • Turn off your TV speakers (refer to your TV owner's guide). • If the soundbar is connected to your TV's HDMI ARC connector, make sure that **Consumer Electronics Control (CEC)** is enabled in your TV system menu. Your TV may refer to CEC by a different name. For more information, refer to your TV owner's guide. • Disconnect the soundbar's HDMI cable from your TV's HDMI ARC connector and reconnect it. • Decrease your TV volume to its lowest setting. • Connect to the soundbar using both the HDMI cable (see page 14) and the optical cable (see page 15).
Poor or distorted sound	• Test different sources if available. • Remove all protective films from the optional bass module or surround speakers. • Run ADAPTiQ® audio calibration (see page 21). • Make sure that your TV can output surround sound audio (refer to your TV owner's guide). If it can't, connect your source to the soundbar and select the appropriate settings in the SoundTouch® app to play surround sound audio directly from the source (see page 45).
Bass is too heavy or low	• Adjust the bass level of the soundbar (see page 31). • Run ADAPTiQ® audio calibration (see page 21).
No available HDMI™ inputs on your TV for sources	• If the soundbar is connected to your TV's HDMI ARC connector, connect a source to the soundbar (see page 44).
Soundbar doesn't play audio from the correct source or selects the incorrect source after a delay	• Set CEC to Alternate On: 1. Within the SoundTouch® app, select **> Settings > Speaker Settings**. 2. Select your soundbar. 3. Select **Advanced Setup > HDMI-CEC > Alternate On**. • Disable CEC on your source (refer to your source's owner's guide for more information). • Connect to the soundbar using both the HDMI cable (see page 14) and the optical cable (see page 15).

Symptom	Solution
No video from a source connected to the soundbar's HDMI IN connector	• Select the TV input to which the soundbar is connected (see page 30). • Make sure that the soundbar's HDMI cable is inserted into a connector on your TV labeled **ARC** or **Audio Return Channel**. Do not plug a source into the soundbar's HDMI IN connector when connecting to your TV using the optical cable. • Unplug the power cords for the soundbar and your source, wait 15 seconds and plug them firmly into a live AC (mains) outlet.
Can't complete network setup	• Select correct network name and enter password (case-sensitive). • Connect the device and soundbar to the same Wi-Fi network. • Enable Wi-Fi on the device (mobile or computer) you are using for setup. • Close other open applications. • If using a computer for setup, check firewall settings to make sure that the SoundTouch® app and SoundTouch® Music Server are allowed programs. • Restart your mobile device, or computer, and router. • If your router supports both 2.4GHz and 5GHz bands, make sure both the device (mobile or computer) and soundbar are connecting to the same band. • Uninstall the app, reset the soundbar (see page 43) and restart setup.
Can't connect to network	• If your network information has changed or to connect your system to another network, see page 27. • Connect to the network using an Ethernet cable.
Soundbar doesn't pair with mobile device	• On your mobile device: – Turn the *Bluetooth* feature on and then off. – Delete your SoundTouch® 300 soundbar from the *Bluetooth* list. Pair again (see page 34). • Move your device closer to the soundbar and away from any interference or obstructions. • Pair a different mobile device (see page 34). • Visit: global.Bose.com/Support/ST300 to see how-to videos. • **Clear the soundbar's pairing list**: On the remote control, press and hold ⱷ for 10 seconds until the *Bluetooth* indicator ⱷ on the soundbar double blinks white. Delete your SoundTouch® 300 soundbar from the *Bluetooth* list on your mobile device. Pair again.
Soundbar doesn't pair with NFC-enabled device	• Make sure your mobile device supports NFC. • Unlock your mobile device and turn on the *Bluetooth* and NFC features. • Tap the NFC touchpoint on your mobile device to the top of the soundbar behind the Bose® logo (see page 35).

ADAPTiQ® audio calibration error messages

Listen to the voice prompts for the following error messages:

Error message	Problem	What to do
1	The microphone on the ADAPTiQ® headset cannot detect sound	• Secure all cables. • Disconnect the ADAPTiQ headset cable and reconnect it firmly into the soundbar's **ADAPTiQ** connector. • Make sure the microphone opening on the top of ADAPTiQ headset is not blocked. • Your ADAPTiQ headset may be damaged. Contact Bose® customer service for replacement parts.
2	The room is too loud	• Restart ADAPTiQ audio calibration when the room is quiet.
3	The ADAPTiQ headset is too close to the speakers	• Move the ADAPTiQ headset farther away from the speakers.
4	The listening locations are too similar	• Move 1 – 2 ft. (.3 – .6 m) away from your previous listening location.
5	The ADAPTiQ headset cannot take measurements due to movement	• Hold your head still.

After correcting your problem, you must restart ADAPTiQ audio calibration (see page 21).

If you hear a different error message, contact Bose® customer service.

773965-0010

©2017 Bose Corporation, The Mountain,
Framingham, MA 01701-9168 USA
AM773965 Rev. 08